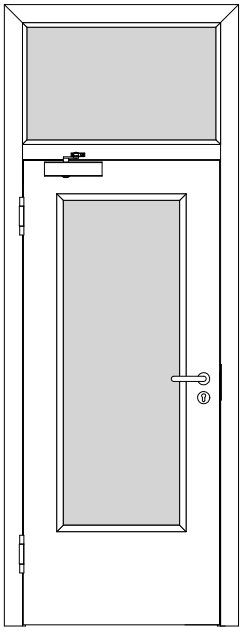

A_FS_TB-BLE-1FLG_OLMKMQ_STU_FS-30-1-LA.pdf

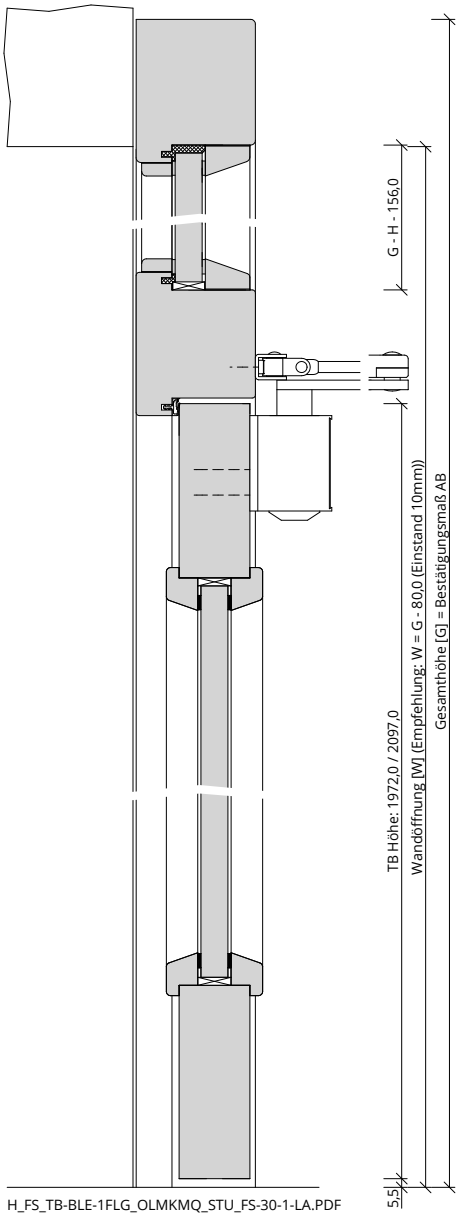

H_FS_TB-BLE-1FLG_OLMKMQ_STU_FS-30-1-LA.PDF

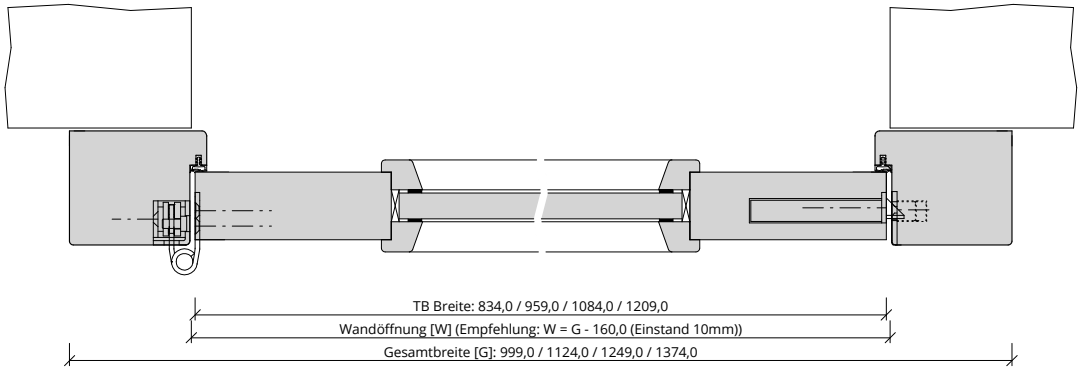

Q_FS_TB-BLE-1FLG_OLMKMQ_STU_FS-30-1-LA.pdf