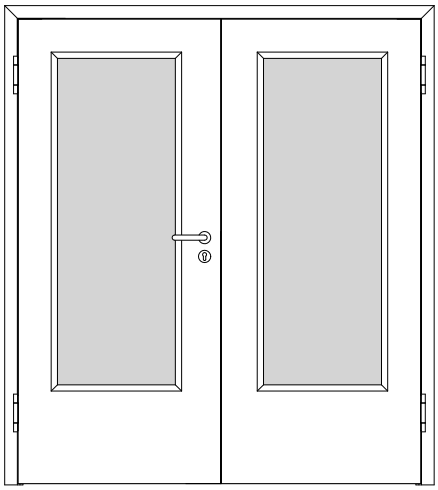

A_SD_TB-BLO-2FLG_SH_STU_SD-42-2-LA.pdf

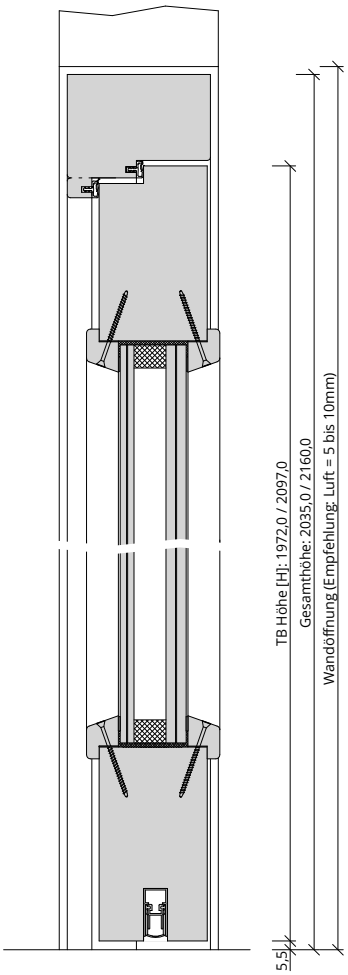

H_SD_TB-BLO-2FLG_SH_STU_SD-42-2-LA.pdf

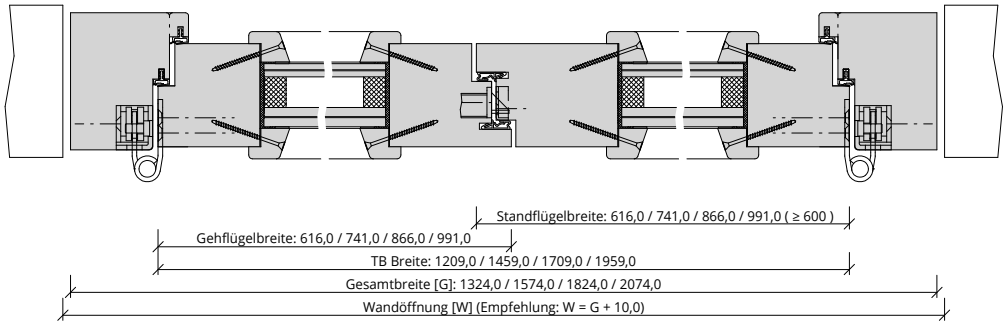

Q_SD_TB-BLO-2FLG_SH_STU_SD-42-2-LA.pdf