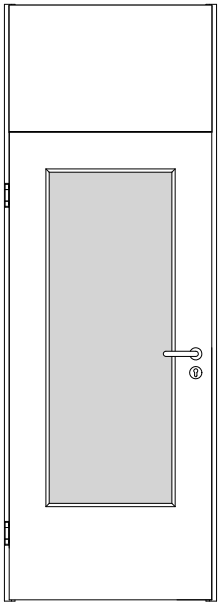

A_DT-GH_OBOKOQ_TB-LA_ST_GEF-1FLG.PDF

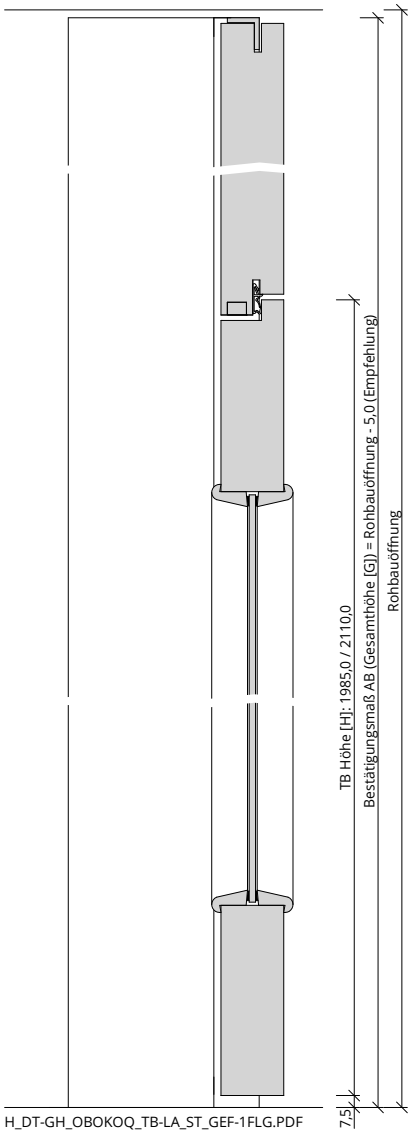

H_DT-GH_OBOKOQ_TB-LA_ST_GEF-1FLG.PDF

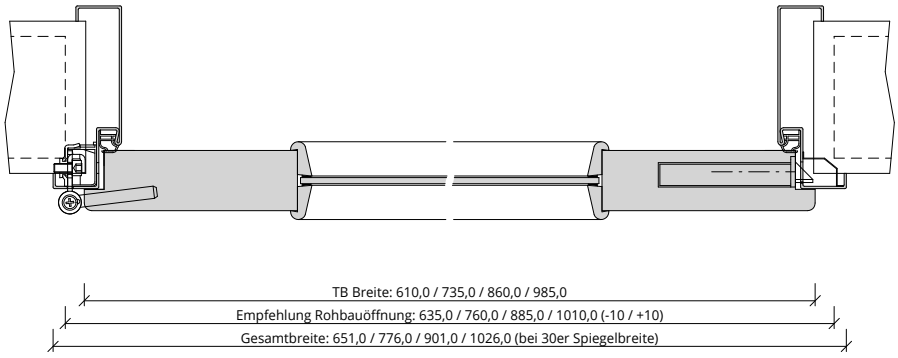

Q_DT-GH_OBOKOQ_TB-LA_ST_GEF-1FLG.PDF