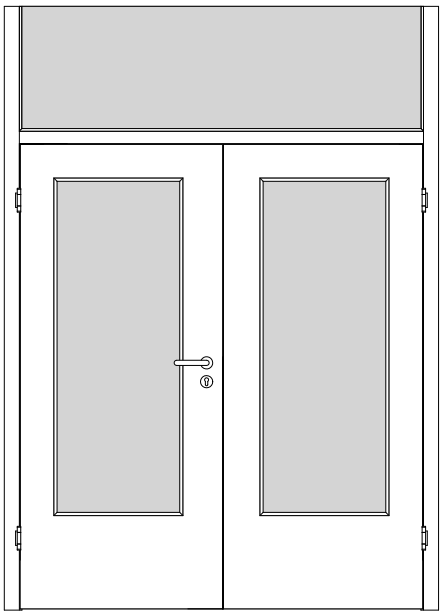

A_DT-GH_OLMKOQ_TB-LA_BLE_STU-2FLG.PDF

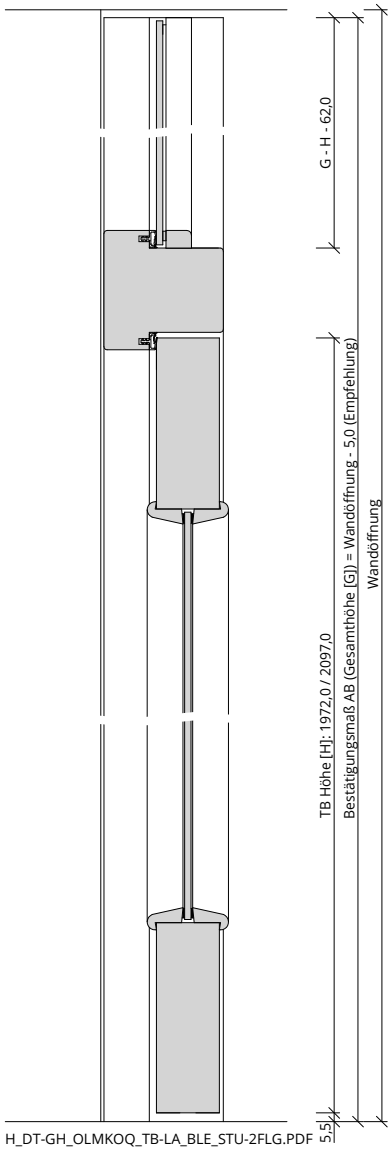

H_DT-GH_OLMKOQ_TB-LA_BLE_STU-2FLG.PDF

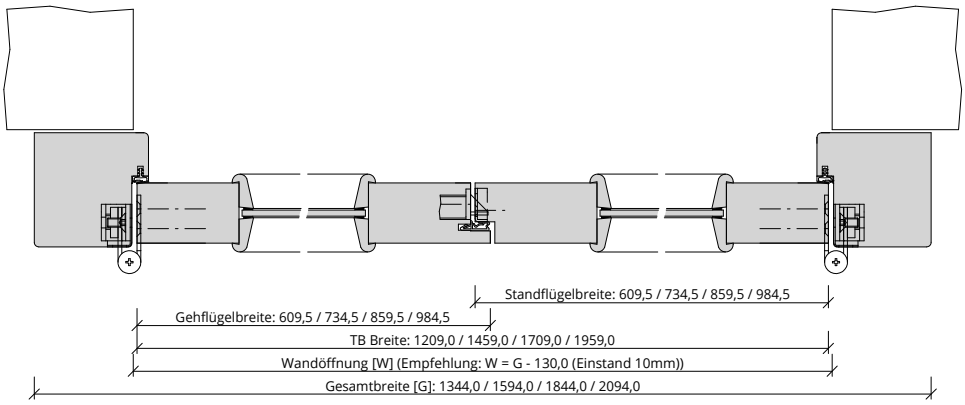

Q_DT-GH_OLMKOQ_TB-LA_BLE_STU-2FLG.PDF