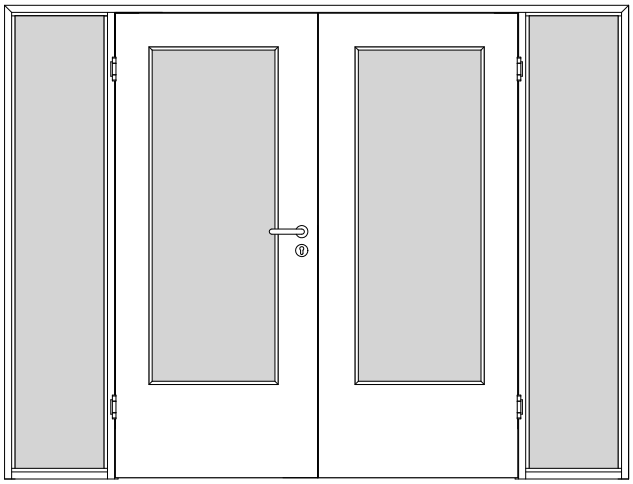

A_DT-WF_WF2_TB-LA_ST_STU-2FLG.PDF

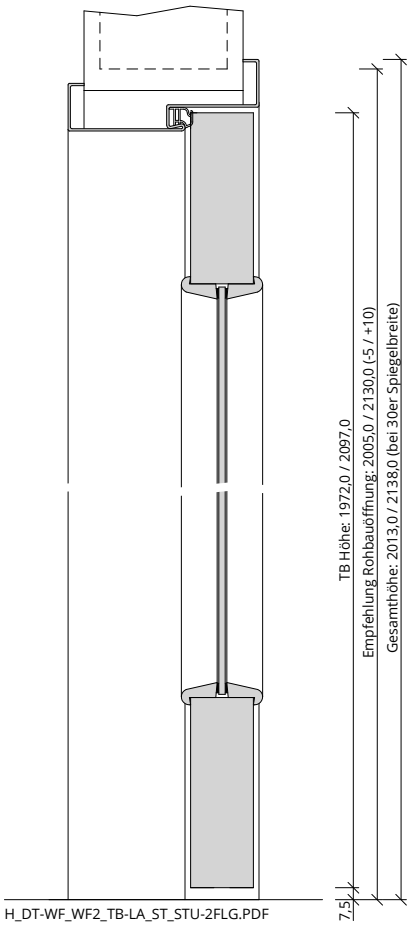

H_DT-WF_WF2_TB-LA_ST_STU-2FLG.PDF

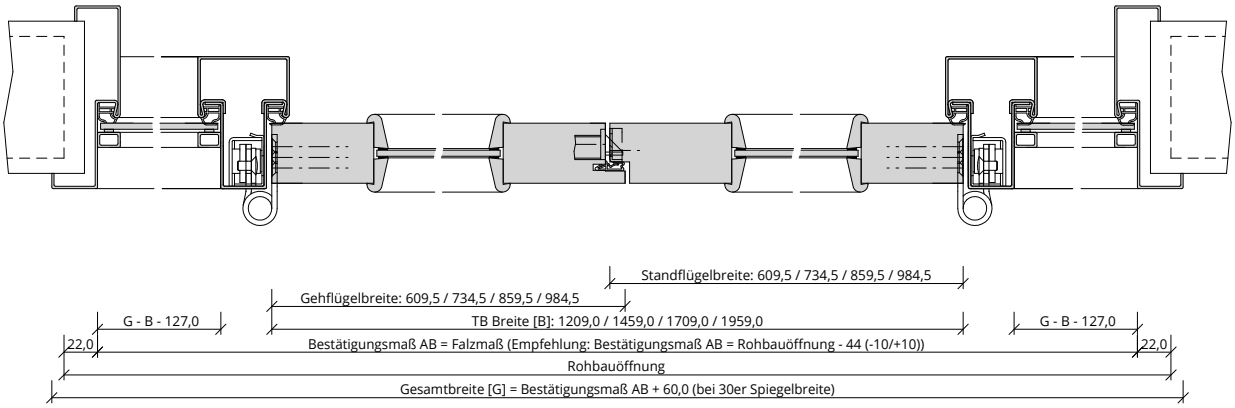

Q_DT-WF_WF2_TB-LA_ST_STU-2FLG.pdf