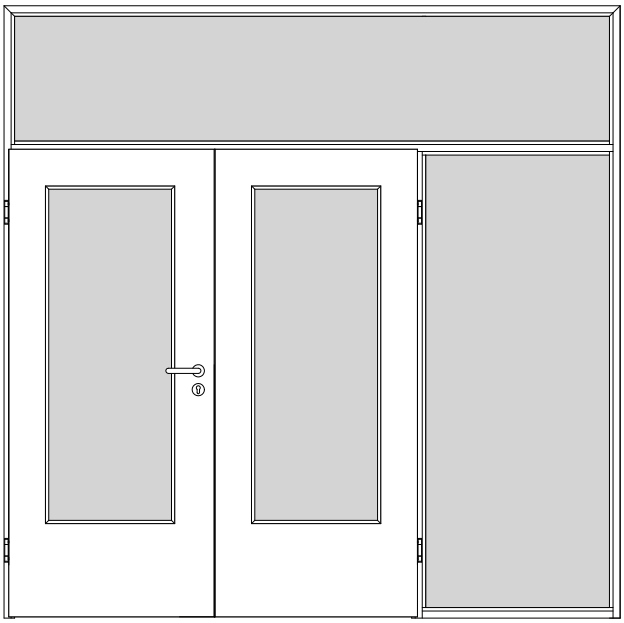

A_DT-WF_WF3_TB-LA_ST_GEF-2FLG.PDF

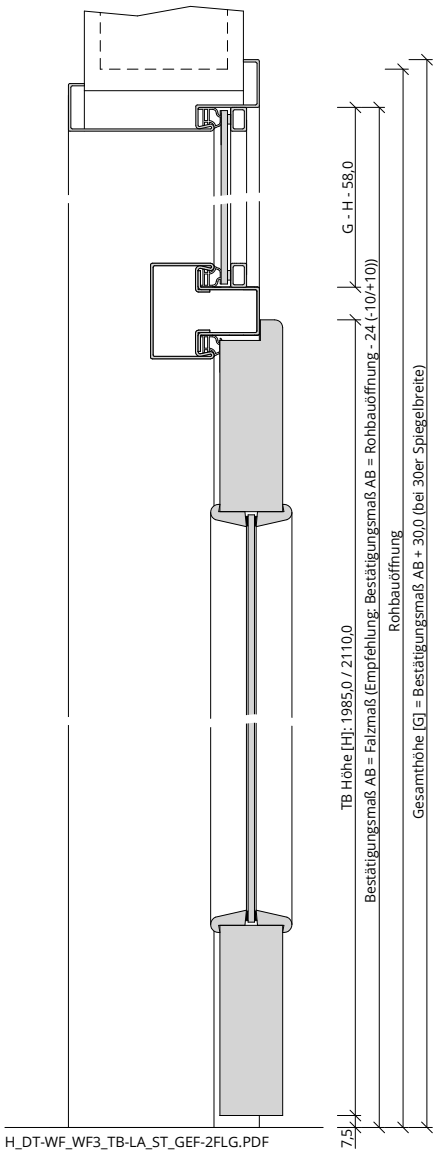

H_DT-WF_WF3_TB-LA_ST_GEF-2FLG.PDF

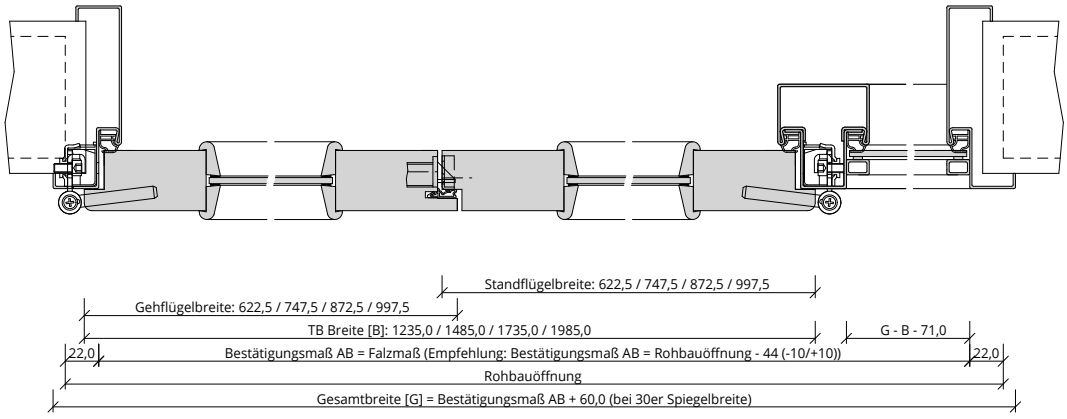

Q_DT-WF_WF3_TB-LA_ST_GEF-2FLG.pdf