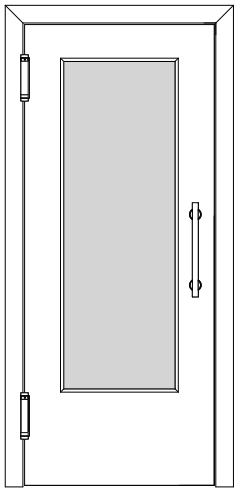

A_PT_TB-LA_BLE_1FLG.pdf

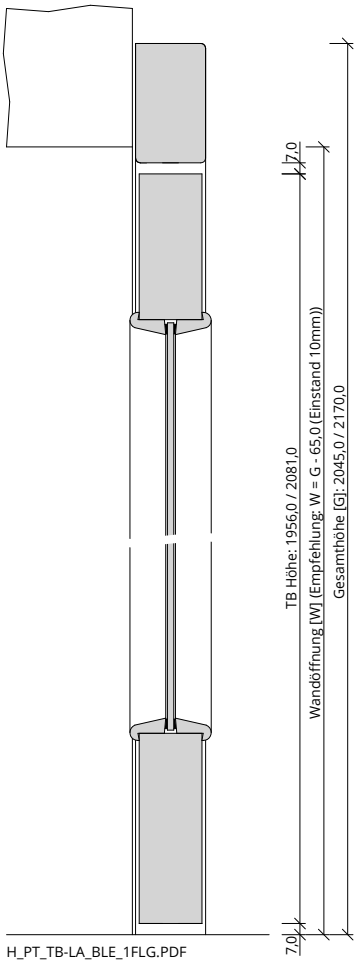

H_PT_TB-LA_BLE_1FLG.PDF

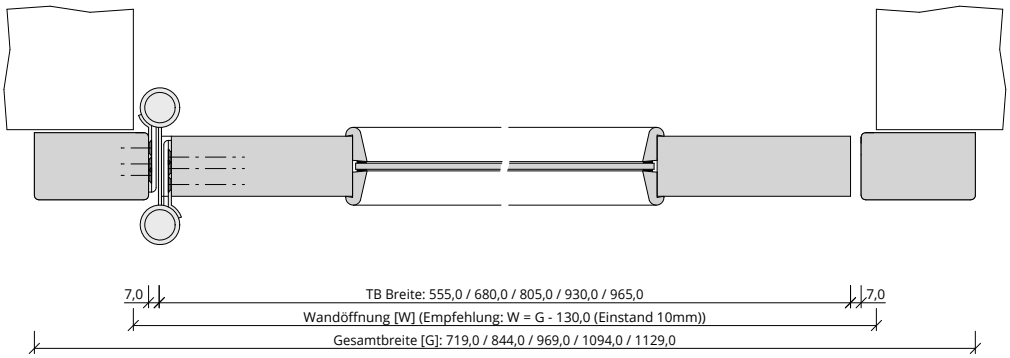

Q_PT_TB-LA_BLE_1FLG.pdf