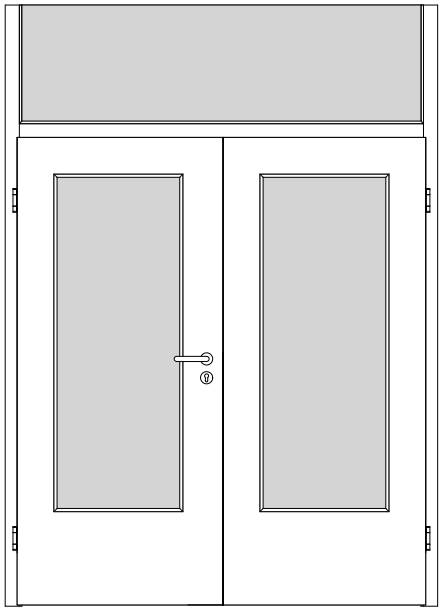

A_DT-GH_OLMKOQ_TB-LA_FU_GEF-2FLG.PDF

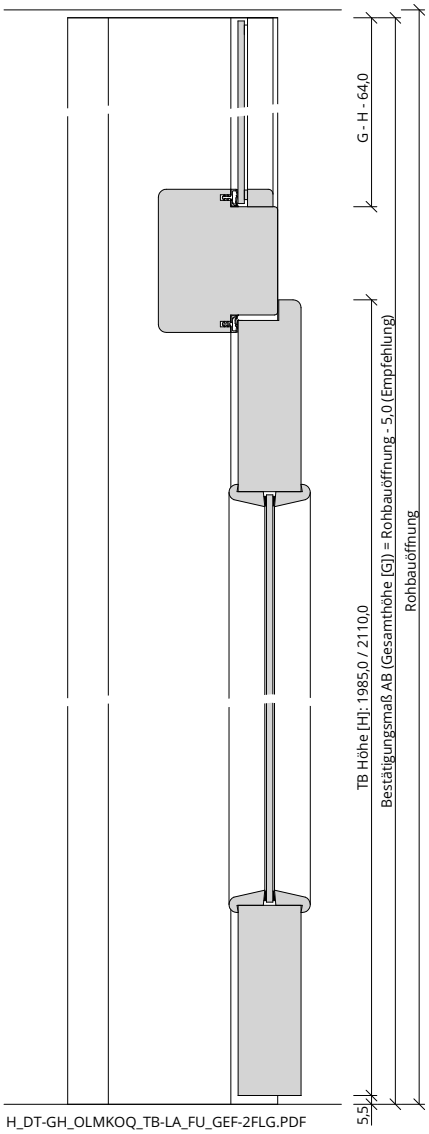

H_DT-GH_OLMKOQ_TB-LA_FU_GEF-2FLG.PDF

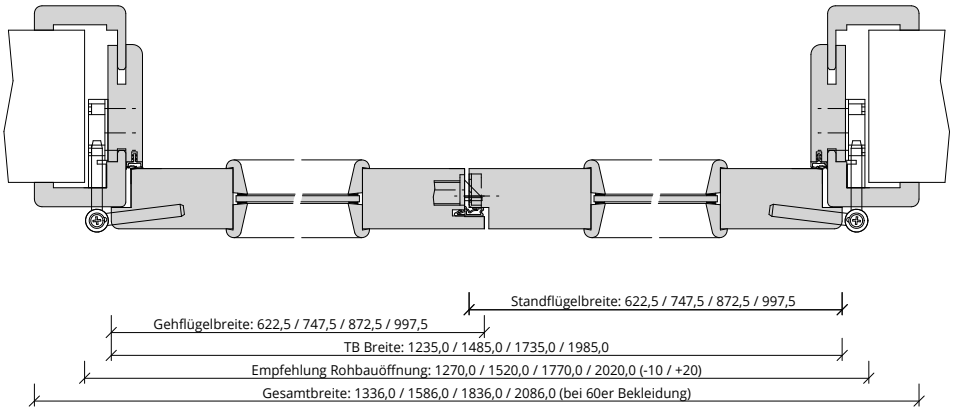

Q_DT-GH_OLMKOQ_TB-LA_FU_GEF-2FLG.PDF