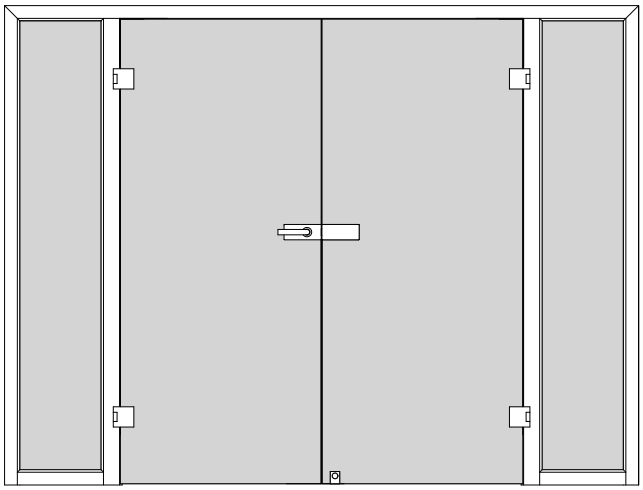

A_DT-WF_WF2_GG_BLO_2FLG.PDF

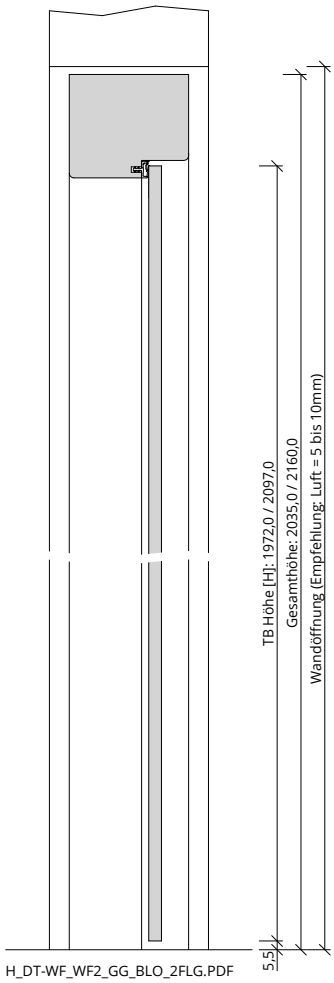

H_DT-WF_WF2_GG_BLO_2FLG.PDF

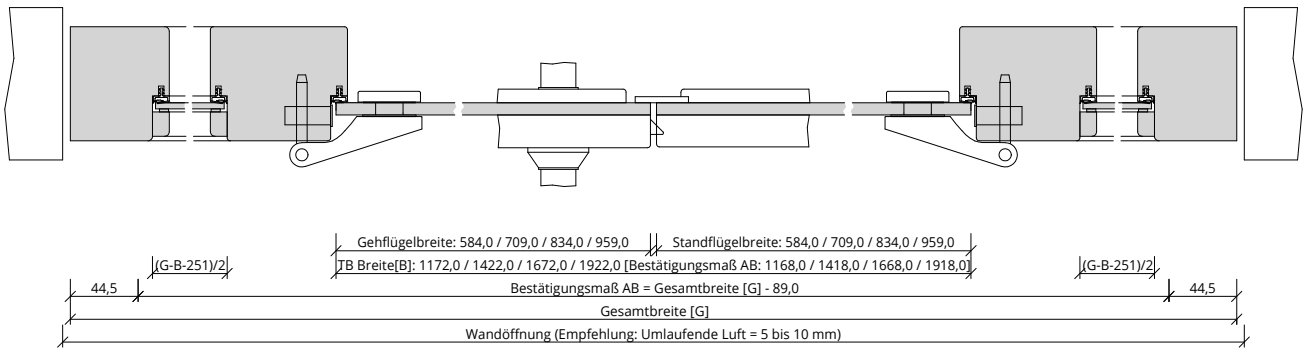

Q_DT-WF_WF2_GG_BLO_2FLG.pdf