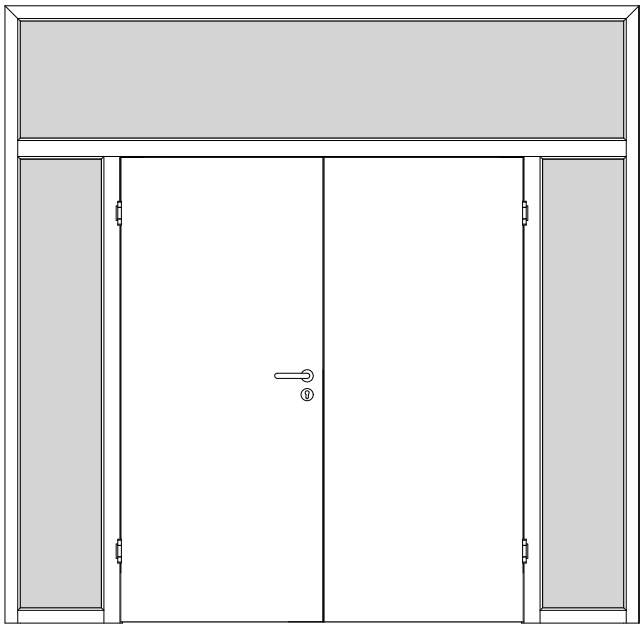

A_DT-WF_WF4_TB_BLO_STU-2FLG.PDF

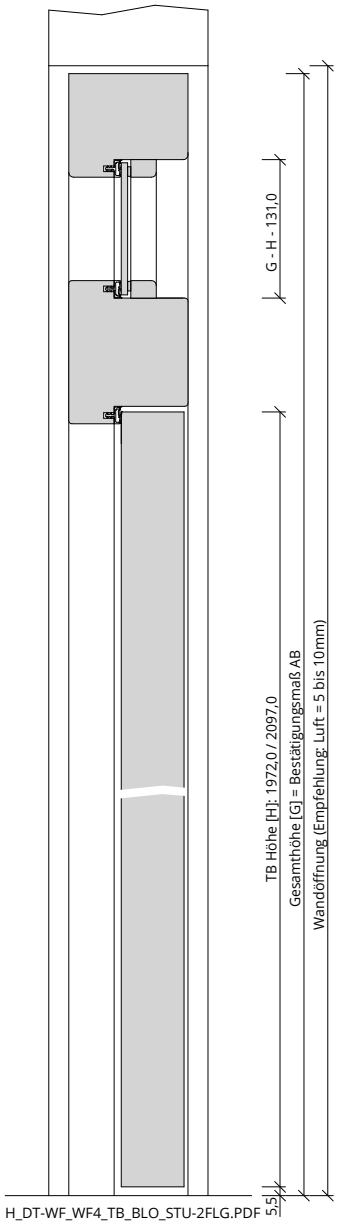

H_DT-WF_WF4_TB_BLO_STU-2FLG.PDF

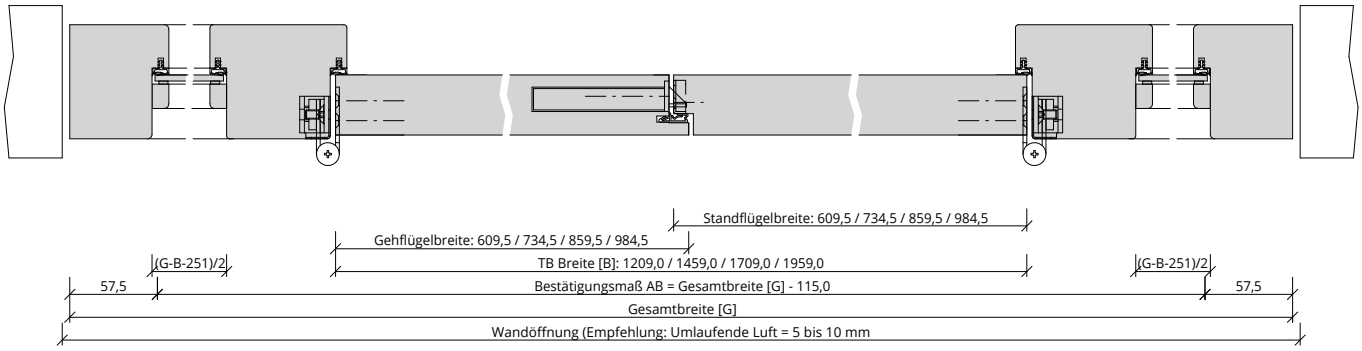

Q_DT-WF_WF4_TB_BLO_STU-2FLG.pdf