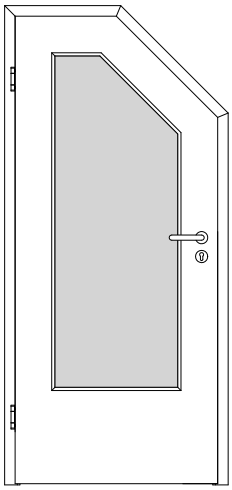

A_SCHRAEG_TYP2_TB-LA_BLO.PDF

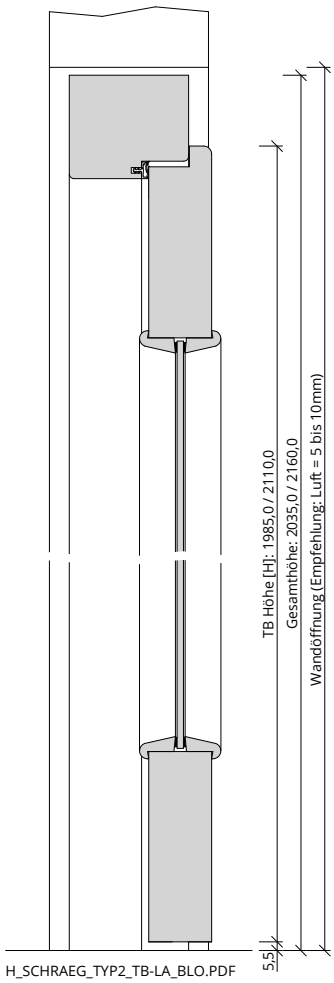

H_SCHRAEG_TYP2_TB-LA_BLO.PDF

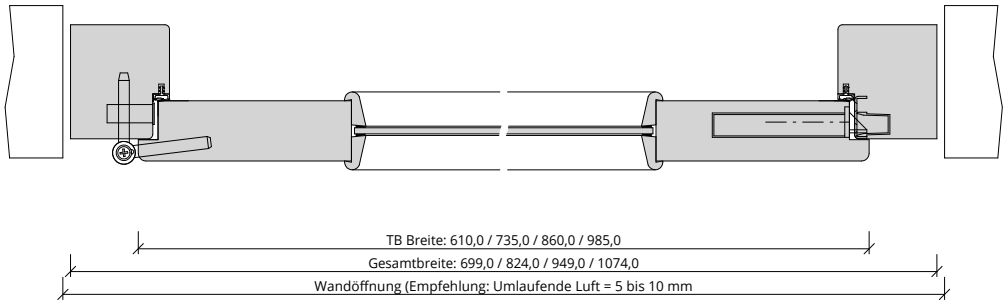

Q_SCHRAEG_TYP2_TB-LA_BLO.PDF