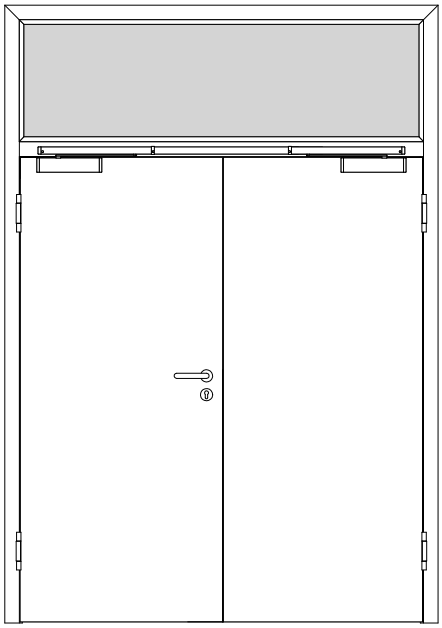

A_FS_TB-BLO-2FLG_OLMKMQ_STU_FS-30-2-RD.pdf

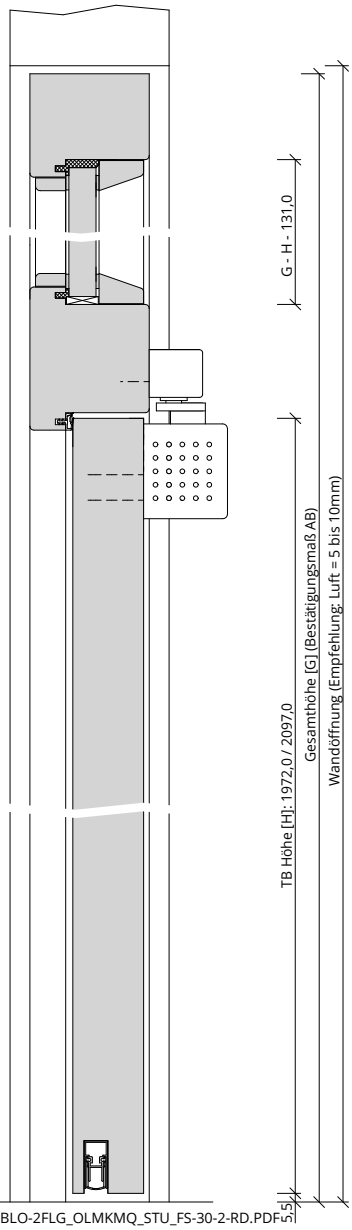

H_FS_TB-BLO-2FLG_OLMKMQ_STU_FS-30-2-RD.PDF

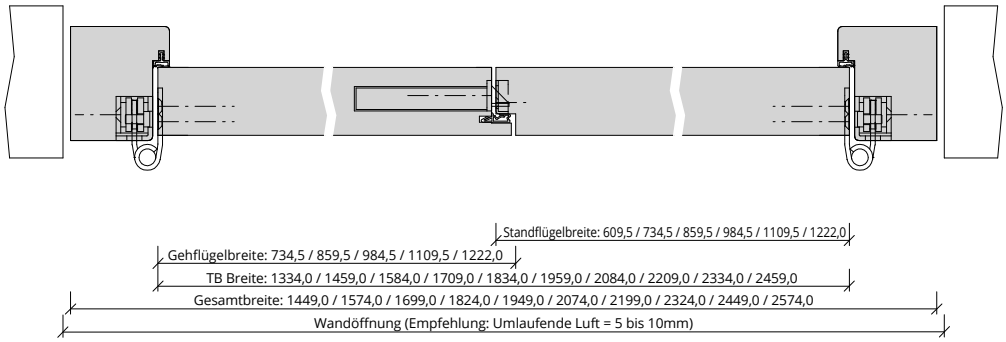

Q_FS_TB-BLO-2FLG_OLMKMQ_STU_FS-30-2-RD.pdf