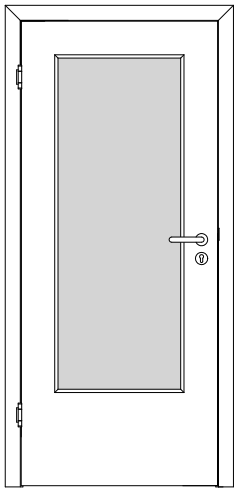

A_SD_TB-BLE-1FLG_SH_STU_SD-37-LA.PDF

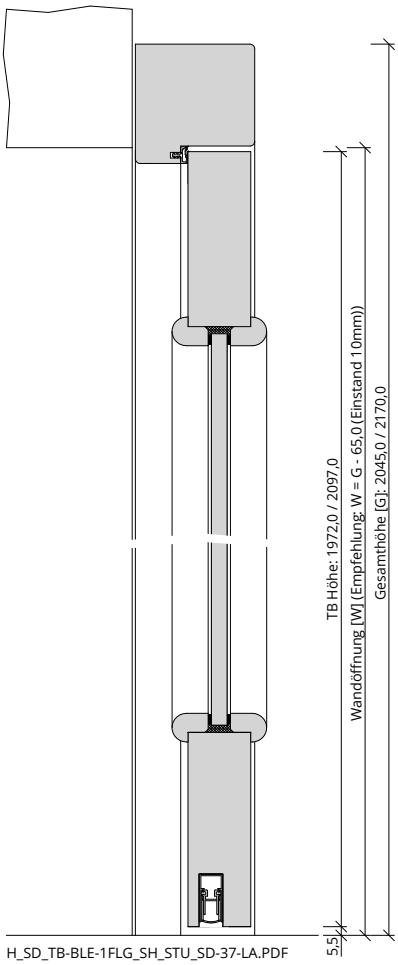

H_SD_TB-BLE-1FLG_SH_STU_SD-37-LA.PDF

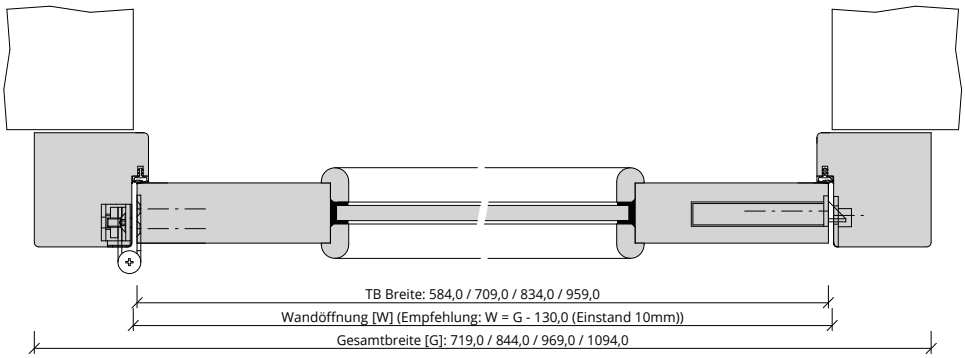

Q_SD_TB-BLE-1FLG_SH_STU_SD-37-LA.PDF