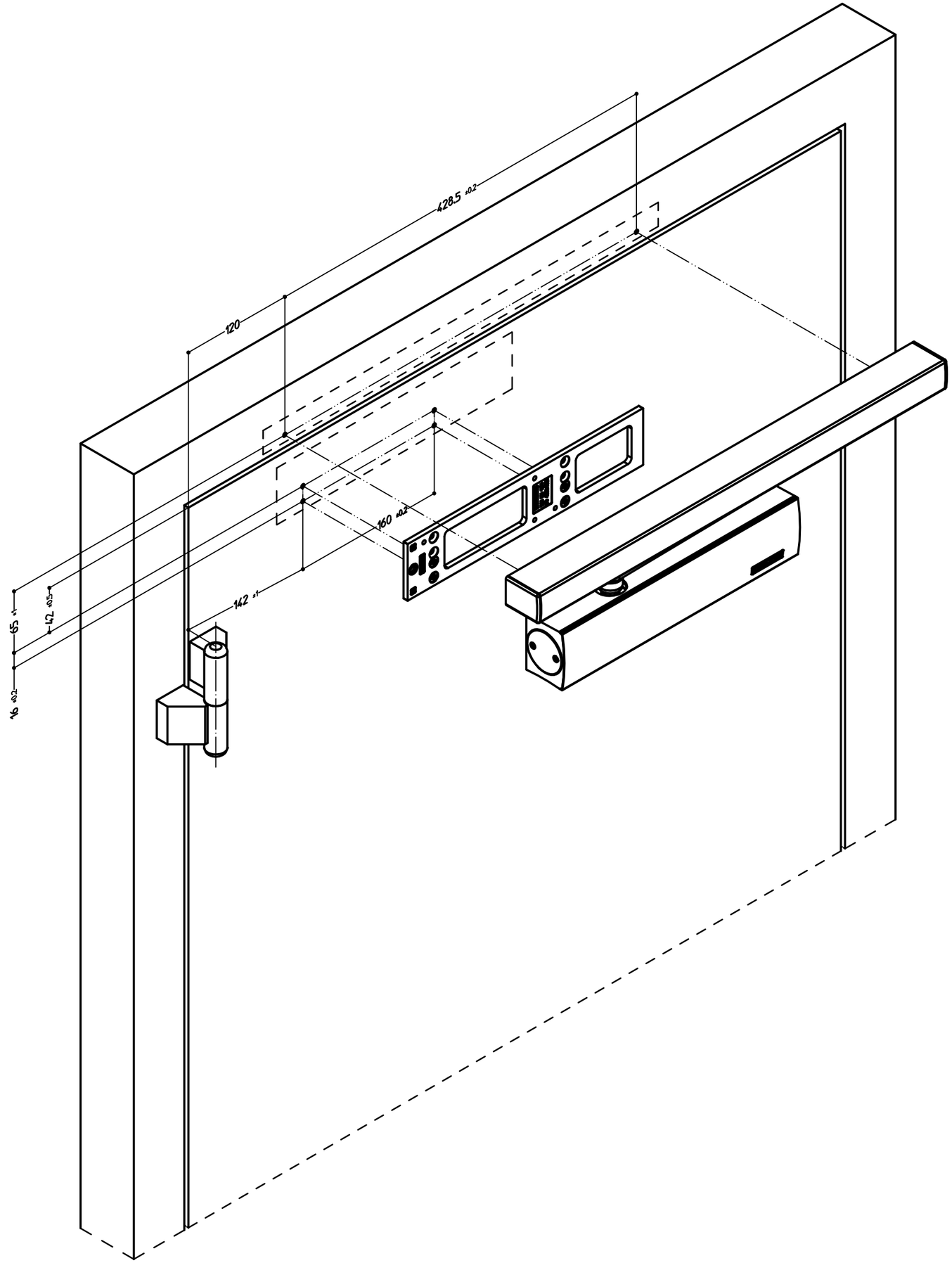
428.5 ±0.2
120
160 ±0.2
142 ±1
42 ±0.5
65 ±1
16 ±0.2